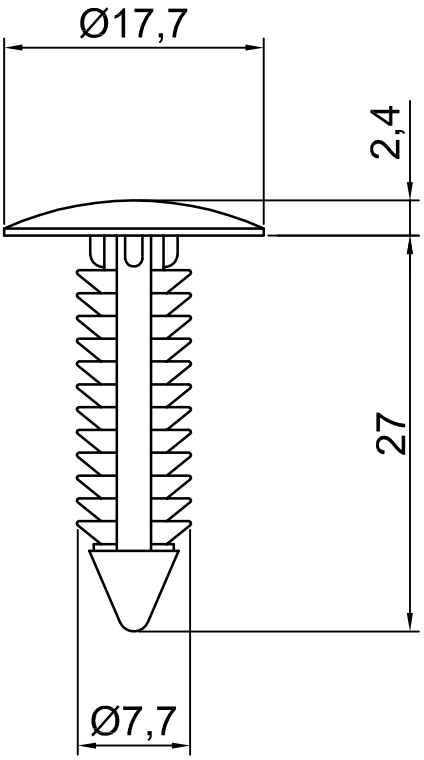


CHASSIS Ø6,4 ~ 7,0

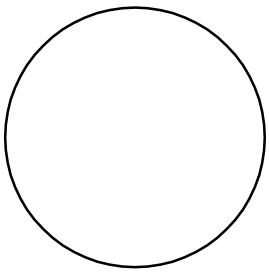

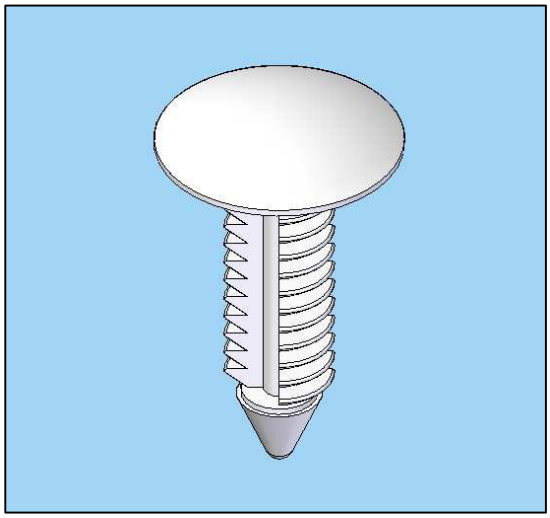

| REFS. | Cantidad Min. Pedido<br>Min. Qty. Order |
|---|---|
| RMF-24 | 1000 |

| Revision<br>Revisión | Resp. | Date<br>Fecha | Description<br>*Descripción* |
|---|---|---|---|
| | | | |
| | | | |

Modifications
Modificaciones

| | | | | | | | |
|---|---|---|---|---|---|---|---|
| Project<br>Proyecto | SNAP RIVET<br>*FIJACIONES* | | | Material | NYLON 66 (UL 94V-2) | | This drawing contains confidential information. Not allowed its reproduction total or partial<br>*Este plano contiene información confidencial. Queda prohibida su distribución total o parcial* |
| Part name<br>*Denominación* | MOUNTING BUTTON<br>*REMACHES* | | | Color | BLACK-WHITE /<br>*BLANCO-NEGRO* | | |
| | | | | Finish<br>*Acabado* | | | All dimensions in metric system<br>*Unidades en sistema métrico* |
| Reference<br>*Referencia* | RMF | | | Scale<br>*Escala* | 2/1 | | Electronics Technologies Plastics |
| | Name<br>*Nombre* | Signature<br>*Firma* | Date<br>*Fecha* | Tolerances unless noted<br>*Tolerancias salvo indicación* | | Version<br>Versión | |
| Drawn<br>*Dibujado* | G. Lamothe | | 27-11-17 | Dimensions<br>*Cotas* | Angles<br>*Ángulos* | Sheet size<br>*Tamaño página* | A-4 |
| Checked<br>*Comprobado* | | | | ± 0.2 | ± 0.5 | Sheet number<br>*Hoja número* | 1/1 |