P.C.B: Ø 4.0
THICKNESS 1.6

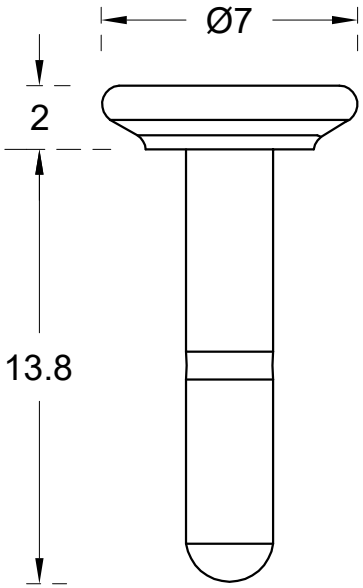

PIN

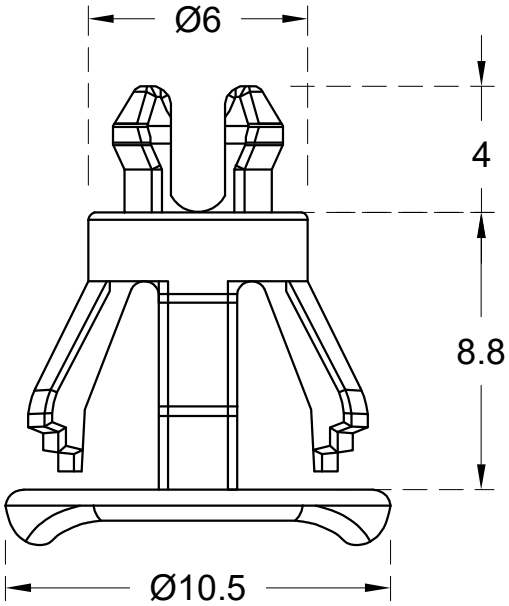

BADY

MOUTING HOLE Ø7
THICKNESS :0.8-1.6

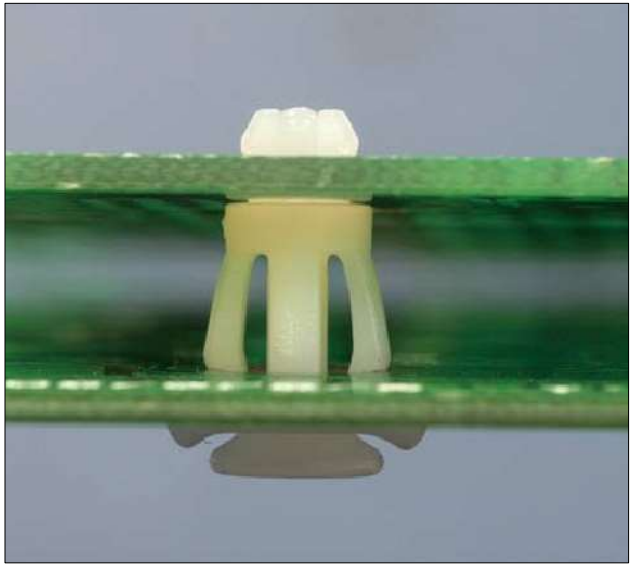

TOL.GEN.DIN 7168	>0.5 a 6	>6 a 30	>30 a 120	>120 a 315	>315 a 1000	>1000 a 2000	Angles	Version	Sheet size	Drawn	SARF		Material	Color	Finish
							± 0.5	R04	A3		Part name	Project	Nylon 66 (UL 94V-2)	Natural/Black	
☐FINO	± 0.05	± 0.1	± 0.15	± 0.2	± 0.3	± 0.5		Sheet number	Checked	Date	ANCHOR SUPPORT	SPACER SUPPORT	This drawing contains confidential information. Not allowed its reproduction total or partial All dimensions in metric system		
☐MEDIO	± 0.1	± 0.2	± 0.3	± 0.5	± 0.8	± 1.2		1/1	-	02/05/19					
☐BASTO	± 0.2	± 0.5	± 0.8	± 1.2	± 2	± 3									

Electronics Technologies Plastics